ITEM NO.	PART NUMBER	DESCRIPTION	QTY.
1	MAIN BODY #'S (COLLAR SIZES) EARD06 EARD08 EARD10 EARD12 EARD14	DIFFUSER MAIN BODY	1
2	RETURN AIR BOTTOM	DIFFUSER RETURN BOTTOM	1
3	CR2	BOTTOM PLACEMENT RODS	4

PRINT DIMENSIONS ARE ACCEPTABLE FOR PRODUCTION TOOLING
NAME:
DATE:

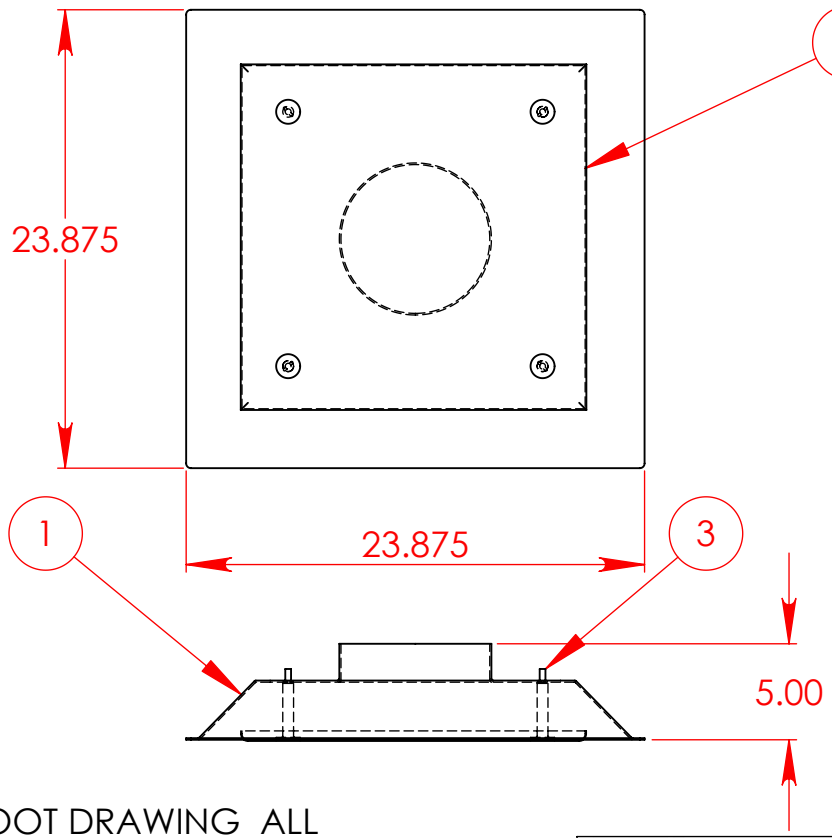

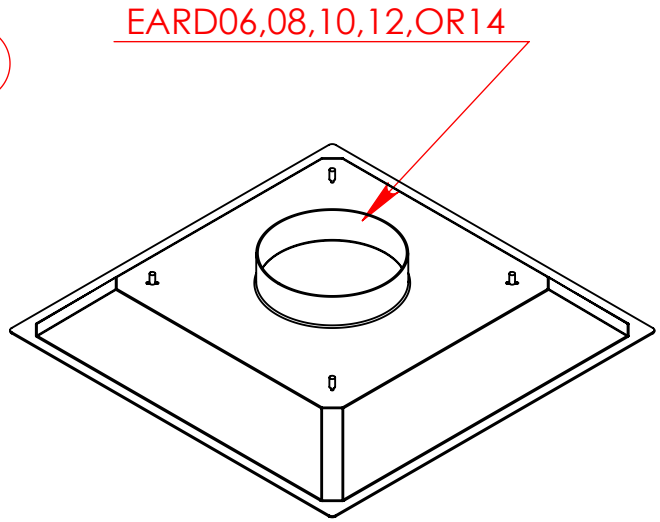

NOTE: MOLD/BOOT DRAWING ALL DIMENSIONS ARE FROM INSIDE OF BOOT
MATERIAL:

EGER PRODUCTS, INC.

REVISIONS:

PROPRIETARY AND CONFIDENTIAL
THE INFORMATION CONTAINED IN THIS DRAWING IS THE SOLE PROPERTY OF EGER PRODUCTS, INC.. ANY REPRODUCTION IN PART OR AS A WHOLE WITHOUT THE WRITTEN PERMISSION OF EGER PRODUCTS INC. IS PROHIBITED.

UNLESS OTHERWISE SPECIFIED, TOLERANCE LIMITS ARE:
FRACTIONS: ±1/64 2 PLACE DECIMALS: ±.02 3 PLACE DECIMALS: ±.005

DATE: 1/22/2007	CUSTOMER: EGER-ABBOTT
SCALE: NTS	PART #: EARD08W
DRAWN BY: E. GREEN	DWG. #:
APPROVED BY:	MATERIAL: